Fade collection

PRODUCT SHEET



prostoria

Fade collection

by **NUMEN / FOR USE**

Fade is a sofa bed system featuring a characteristic, continuous diagonal bevel of edges, applied on all of the elements of the system. This formal fade-out of volumes, varying in depth or height, results in a soft transition of elements, uniting the cuboids of the seat, backrest and armrests.









SPECIFICATIONS AND TECHNICAL DRAWING

STRUCTURE	solid wood, plywood
SUSPENSION	wave springs, elastic webbing
SEAT & BACKREST	HR foam, polyester wadding
UPHOLSTERY	fabric (removable)
MATTRESS TYPE	HR foam

product information website

2.5SEATER + EXTENDED (L/R)
w 99¼" × d 69" × h 30"
w 252 × d 175 × h 76 cm

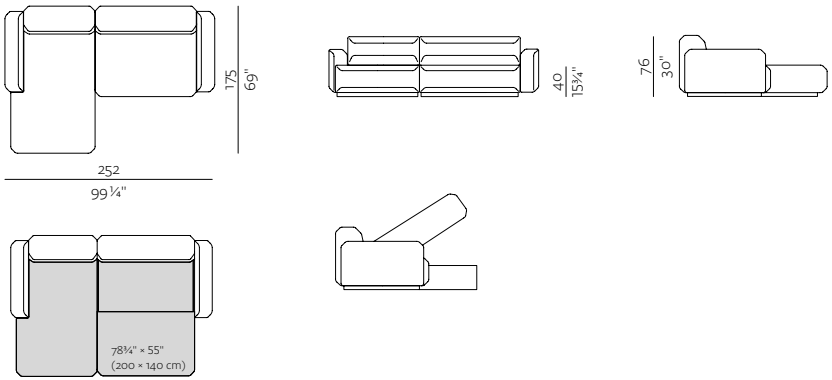

2.5SEATER + EXTENDED (L/R)
w 115" × d 69" × h 30"
w 292 × d 175 × h 76 cm

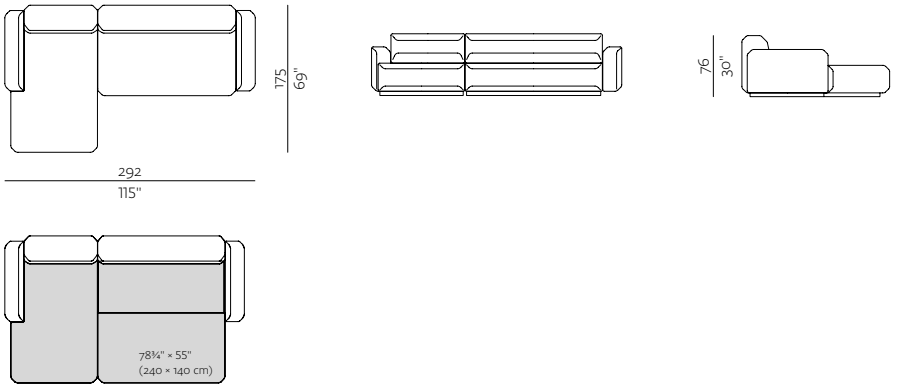

3SEATER SOFA
w 96¾" × d 42¾" × h 30"
w 246 × d 108 × h 76 cm

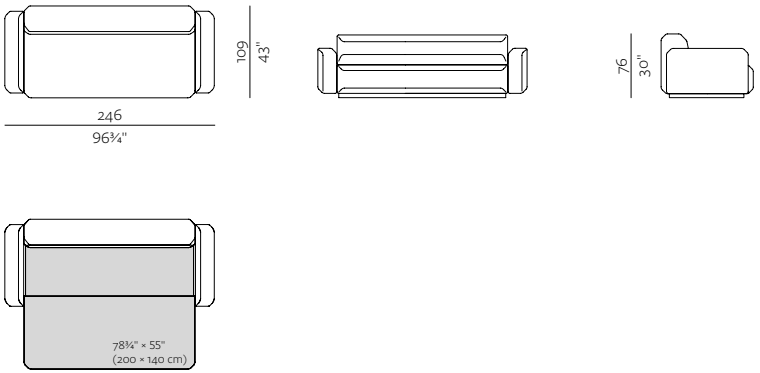

prostoria